90° PCB MOUNTED INSULATED SOCKET - SINGLE

Sheet No.	**PS 0485**	Sheet 1 of 1	Signature
Date :	02.10.94	Deltron Part No.	**571 SERIES**
Issue No. 2			

Dimensions

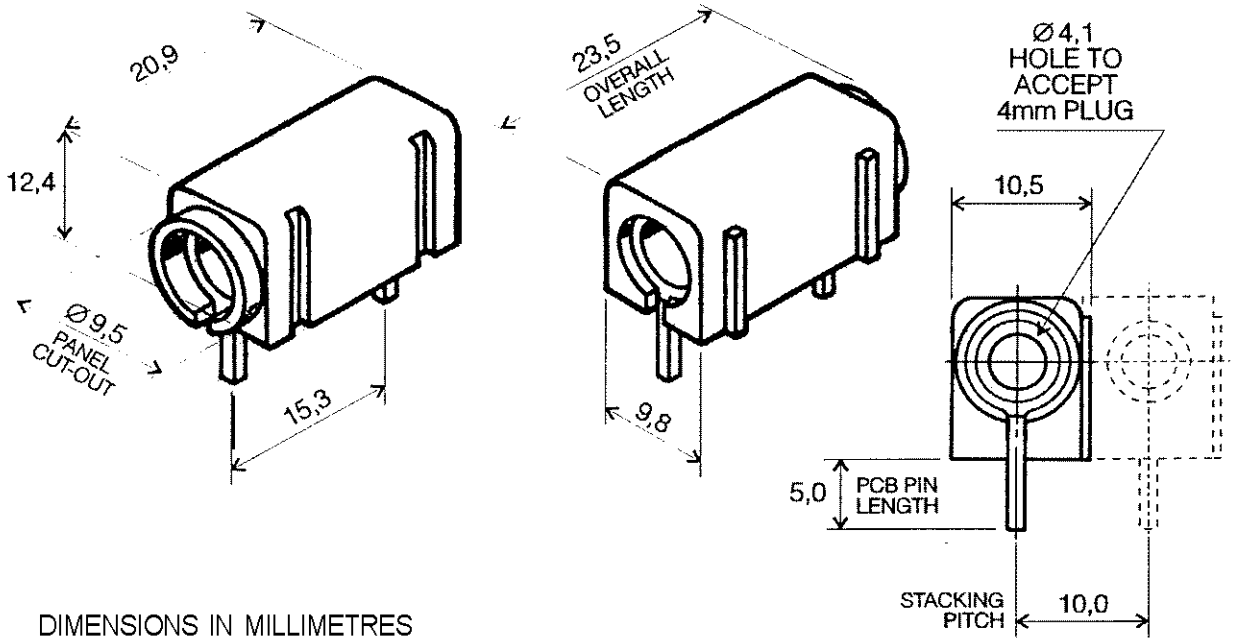

DIMENSIONS IN MILLIMETRES

Description

A single insulated 4mm socket, for direct mounting onto printed circuit boards. Has grooves in the outer acetal housing which provide side stacking alignment.

COLOUR	ORDER CODE
BLACK	**571-0100**
BLUE	**571-0200**
BROWN	**571-0300**
GREEN	**571-0400**
RED	**571-0500**
WHITE	**571-0600**
YELLOW	**571-0700**

Features

MATERIALS

HOUSING	: Acetal
PINS	: Brass, silver plated
BUSH	: Brass, silver plated

CURRENT RATING : 10 Amps

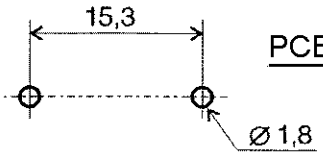

PCB LAYOUT